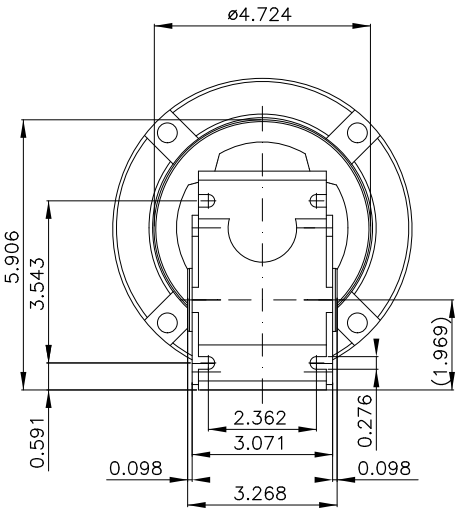

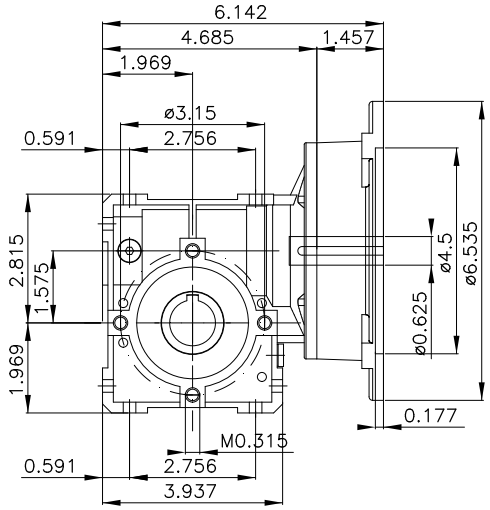

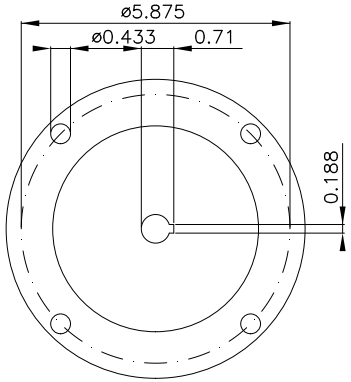

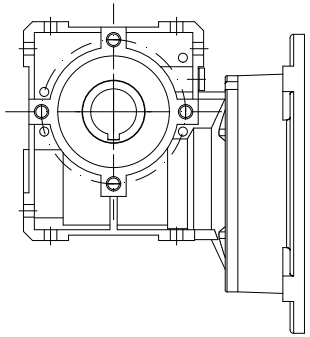

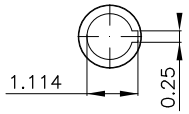

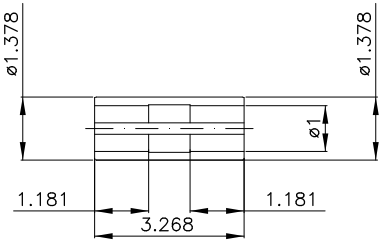

SK1SI40 – N56C

NORD

Nord Internet: http://www.nord.com

	Date	Name
Drawn	16.11.2022	SYSTEM

General tolerances DIN ISO 8062-3 – DCTG 9-12
This drawing is created with NORDCAD 9.2.6 DriveExpert – Technical changes reserved!